Leyland OLYMPIAN

www.barp.ca

The Unexpected Answer

Leyland OLYMPIAN

The unexpected answer to transit industry's need for a high capacity bus.

Leyland Bus presents the Olympian double decker . . . the unexpected answer to American transit needs.

The double decker offers high passenger capacity, driver productivity, outstanding marketing benefits and low life cycle costs. Careful research has indicated that the double deck bus is an ideal choice for the American transit industry.

www.barp.ca

The Leyland Olympian is the best double decker available today. It is a well established design, proven in arduous transit service around the world.

Advantage has been taken of the Olympian's versatility to design a vehicle specifically for North America.

The basis of the vehicle is a rugged steel underframe which supports the body and running units and takes the brunt of the suspension loads.

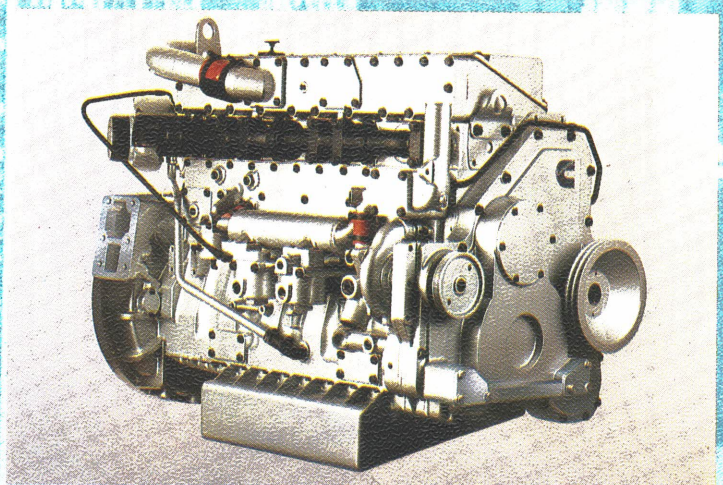

Cummins L10 Power

The Cummins L10 engine offers new standards of fuel economy – a major concern of the American transit industry. In its California version, it develops 240 horse power.

The turbocharger and after-cooler mean high performance yet low noise and emissions.

Light weight makes it an ideal choice as a bus engine, and the L10 is backed up by Cummins reputation for reliability and durability.

The radiator mounted at the front of the chassis is part of the no loss pressurized cooling system which ensures efficient engine cooling at all ambient temperatures.

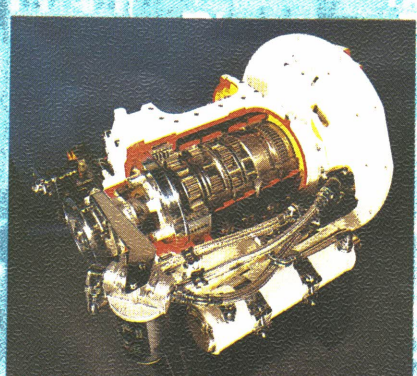

e American
ow cost,

Advanced Brakes and Suspension

There is an ample 776 sq. in. of lining area to stop this bus, backed up by an advanced anti-lock braking system, and a retarder.

The suspension is full air, ensuring a constant ride height under all loading conditions. Two air bags at the front and four at the rear give a smooth ride, excellent handling and high roll stiffness.

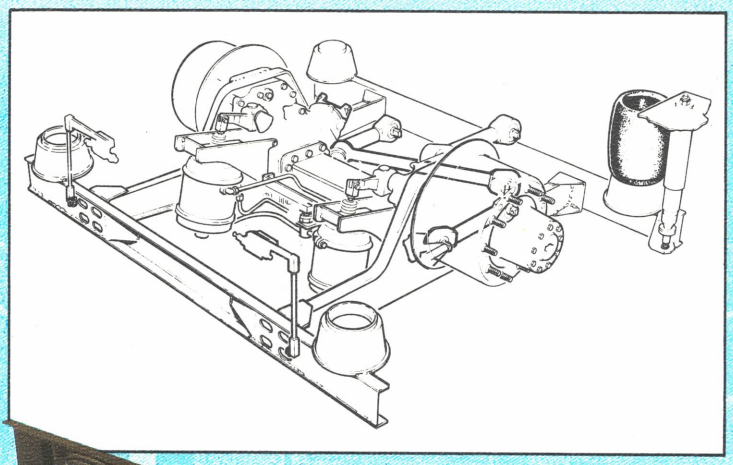

Design for Maintenance

The Olympian will look familiar to American mechanics. The engine and transmission are in the usual place, at the rear of the bus, and readily accessible from ground level. But there are many special features to ease servicing and avoid repairs. For instance, the power pack is slung from above so that engine and transmission can be removed individually. Electrical units are sensibly grouped near the driver's compartment. And the air conditioning system is packaged for easy routine maintenance.

www.barr.ca

Hydracyclic Transmission

The Leyland Hydracyclic transmission is designed specifically for transit buses providing smoothness of operation and the ability to withstand hours of continual shifting. The four speed close ratio automatic gearbox offers smooth shifts and high efficiency.

There is an integral retarder within the transmission which gives progressive deceleration down to just two miles an hour.

The transmission is an in-line unit, with a separate angle drive mounted to take power to the rear axle.

Driver's Compartment

Leyland spent five years using human factors techniques to develop the optimum driver's compartment. And the Olympian has it. All major controls are to hand, instruments are intelligently grouped, and warning lights are clearly visible.

The driver's seat is fully adjustable, and vision is first class.

Body Features

The Olympian body is stylish yet simple.

Stylish because today buses have to be attractive. There are large picture windows and 43 inch wide doorways. The smooth sides ease cleaning. The space between decks provides a perfect advertising site – an important source of extra revenue. At the front there is room for a very large destination sign.

Simple because that is what properties want. All glass is flat. All panels are flat aluminum so repairs are straight forward. Curved sections are in fibreglass.

The body structure is made up of aluminum sections, fixed with rivets. This construction ensures high strength with light weight and long term resistance to corrosion.

The interior is also simple in concept, with the emphasis on ease of cleaning and passenger comfort. A wide variety of trim and seats is available.

Because of the Olympian's modular design, there is no standard layout. Doors, seats and the staircase can be located in many different positions to meet each customer's needs. The arrangement shown here is only typical.

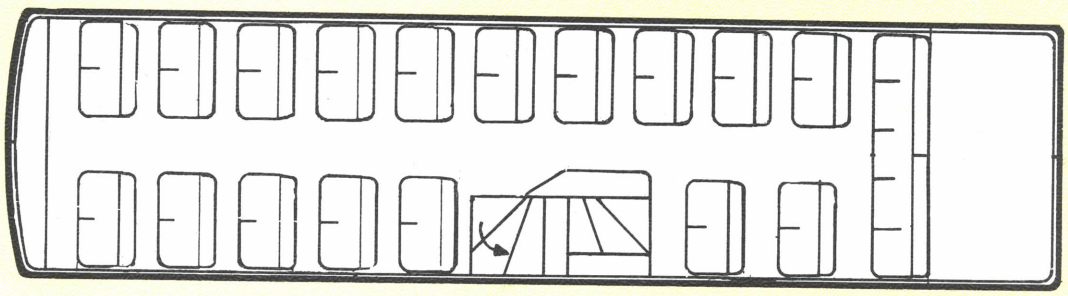

UPPER DECK — 39 SEATS

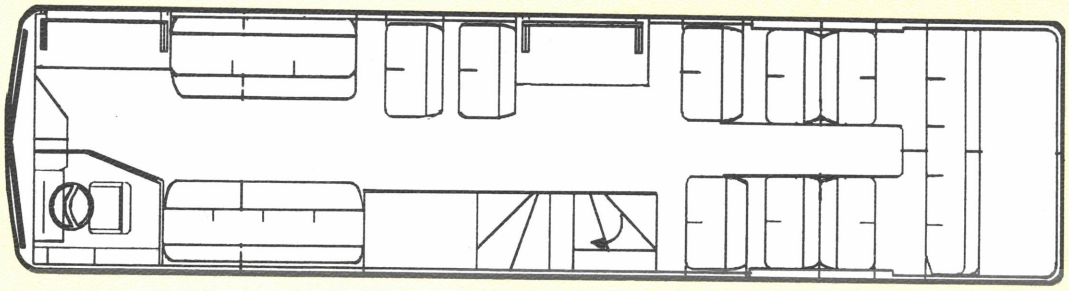

LOWER DECK — 28 SEATS

www.barp.ca

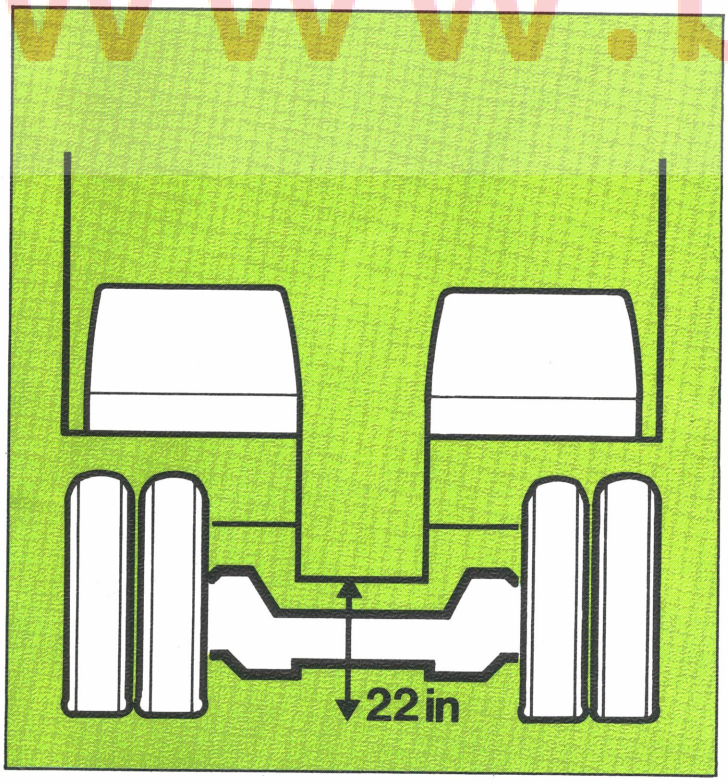

Low Floor

The Olympian has a lower deck floor height of just 22 inches, a full 10 inches lower than most buses available today. That means fewer steps in doorways, faster passenger loading and unloading. Most significantly perhaps, this low floor means easier bus travel for the elderly and infirm.

Surprisingly, this floor level is achieved with proven, uncomplicated running units. These include the drop center rear axle.

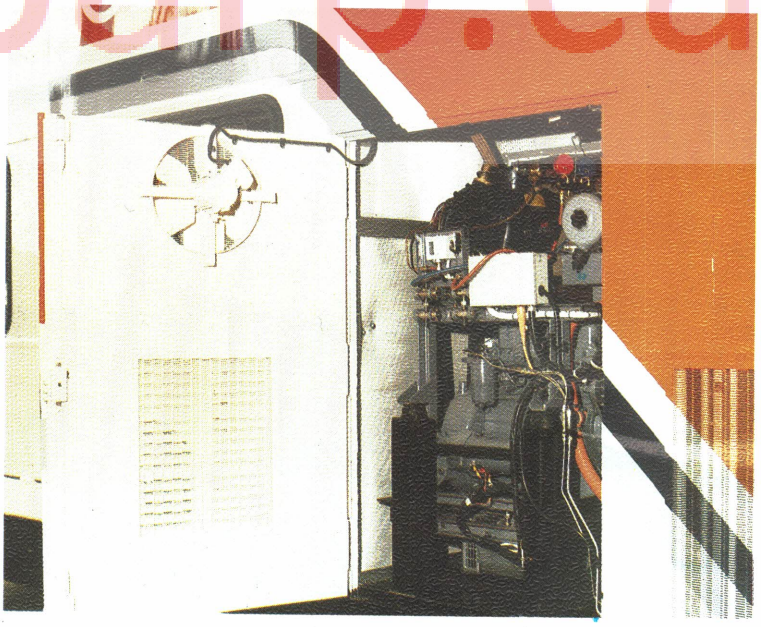

Full Air Conditioning

The air conditioning system on this bus is manufactured by Stone International Ltd. It has an 8.9 ton (26850 kcal/h) cooling capacity and incorporates a bus heater for winter use.

The system is independent from the bus propulsion unit and is powered by a Perkins 4.108 31 hp diesel engine fitted under the stairwell. This drives a 6.5 kW alternator which provides a 415 V ac 3 phase supply to the system fan motors.

Thermostatic control ensures an even climate throughout the bus under all passenger loading conditions. The driver can select which mode the system is to be in.

The condensers are fitted next to the stair case. The evaporators are sited at the rear of the top deck, well above the engine in an area of clean air.

Why a Double Decker

The double decker could be the unexpected answer to your transit needs. It has a high passenger capacity. Passengers love the large number of seats and the low floor line. The upper deck is a magnet to new riders, eager to enjoy a unique panorama of their city.

Compared with other types of high capacity bus, the double decker makes very efficient use of road space, takes up little depot area and requires no special driving skills.

Of course, a bus is a machine for making money. The double decker offers a low initial investment per seat, and attractive life cycle costs.

This kind of bus is in world wide use, with a total fleet approaching 40,000. Recent converts to this concept include Ecuador, Greece, Indonesia, Kuwait, the Philippines and Singapore.

Stability

Double deckers are extremely stable, as evidenced by this test on an Olympian. It has been tilted to an angle of 28 degrees with the top deck laden and the lower deck empty and remains stable.

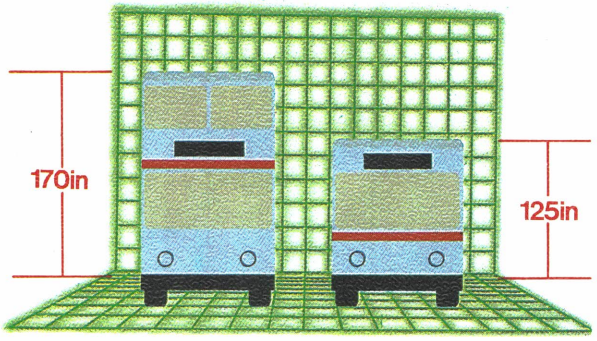

Height

At around 170 inches tall, a double decker is 45 inches higher than most buses or just 8 inches taller than many trucks. So overhead clearance problems can generally be avoided. A 162 inches tall version can be built for commuter or sightseeing applications.

Why the Olympian

Leyland Bus is the world's leading manufacturer of double deck buses, producing over one thousand vehicles of this type every year. The Olympian is the newest of the three designs we build, 1,500 having been sold since it was launched in 1981. It represents 80 years of experience in building double deckers – unrivalled by anyone.

So why the Olympian? First it is purpose designed for transit. Which means it is simple in design, with maintenance and running costs very much in mind. At just 34 feet long it is extraordinarily compact. The staircase is opposite the exit door and ascends towards the front of the bus to safeguard passengers on the staircase if the bus brakes suddenly. The lower deck floor is flat, with hardly any seat platforms. The driver has full view of the top deck using a periscope, and is in close touch with both doors.

The Olympian is a highly versatile concept. Its sensible design has successfully been extended into transit, suburban and even three axle over the road versions. Leyland Bus is ready to respond to any special requirements.

Finally, the Olympian has proven itself in day to day service over millions of miles. On intensive city center transit work in London. As a 200 passenger three axle bus in Hong Kong. On 70 miles an hour luxury express service in Britain. It helps ease traffic congestion in Athens, Greece, and carries commuters and tourists in Alexandria, Egypt.

Now is the time for the Olympian to prove its worth in North America.

www.bcrr.ca

Leyland Olympian specification

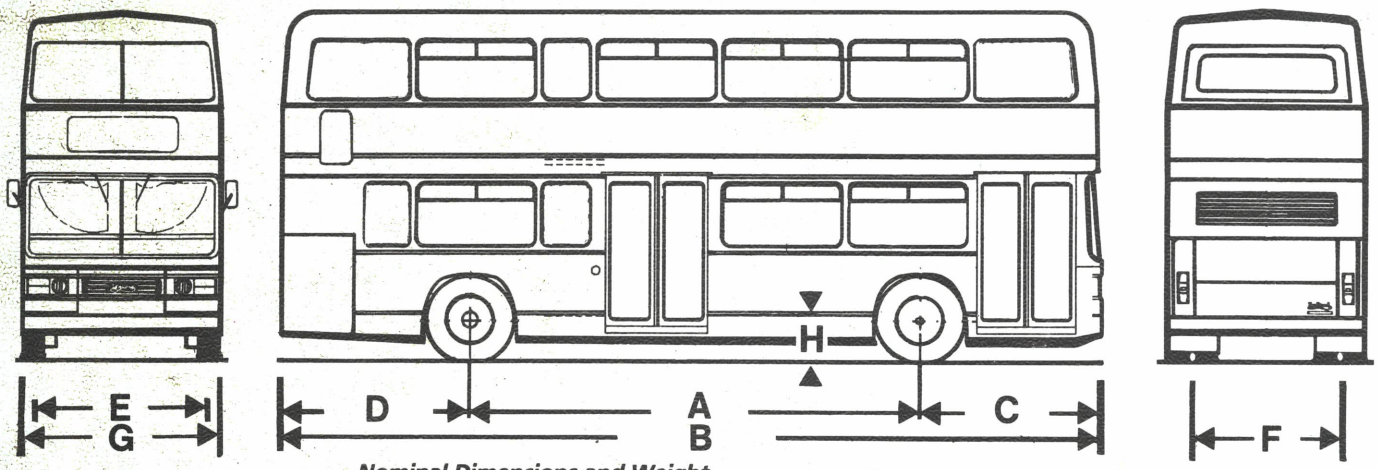

Nominal Dimensions and Weight

A	B	C	D	E	F	G	H	Gross Weight
222 in.	405 in.	90 in.	92 in.	84 in.	73 in.	98.5 in.	22 in.	36,250 lb.

Air conditioning
Stone Transportation semi-packaged system.
Cooling capacity – 106,600 Btu/hr.
Carrier 05G Compressor.
Perkins 4.108 litre auxiliary diesel engine.
415V AC auxiliary electrical system.

Axle front
Leyland 'I' section steel beam.
Capacity – 14,600 lb.

Axle rear
Leyland fully floating, double reduction, drop center with spiral bevel.
Capacity – 23,500 lb.

Brakes, service
Dual line, full air, split system with spring park brakes.
Total lining area – 776 sq. in.
Girling Skidcheck anti-lock brake system.

Cooling System
Pressurized no loss type.
Front mounted radiator – matrix area 749 sq. in.

Electrical System
24V DC. Alternator 100A.

Engine
Cummins LTA10 - B240 turbocharged after cooled in-line six cylinder diesel.
Displacement 611 cu. in. Rating (California) 240 SAE gross hp at 2,100 rpm.

Frame
Perimeter type construction of channel section pressed steel.

Fuel System
Direct injection.
Twin interconnected fuel tanks – capacity 66 US gallons.

Retarder
Leyland multi-plate hydraulic type mounted in transmission.

Suspension
Full air front and rear.
Front – two Dunlop 10 in. diameter rolling lobe diaphragms with four telescopic dampers.
Rear – four Dunlop 12 in diameter lobe diaphragms mounted on steel channel 'H' frame.
Four telescopic dampers.

Steering Gear
Integral power box.

Transmission
Leyland Hydracyclic Series automatic 4-speed hydraulically activated epicyclic gearbox.

Wheels and Tyres
Wheels – spigotted type.
Size 8.25 × 22.5, 6.5 offset.
Tyres – 11R × 22.5 radial.

Bodywork
Capacity:
Seats – 67
Lower Deck – 28
Upper Deck – 39
Standees – 20

Body Construction
Aluminum section frame with aluminum panelling and fibreglass mouldings.

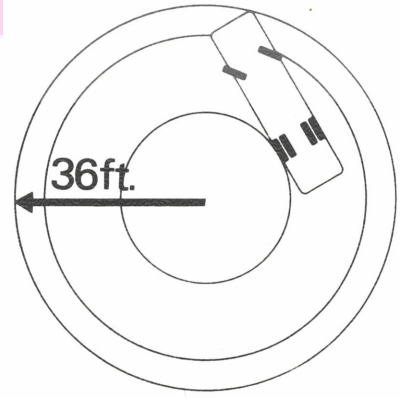

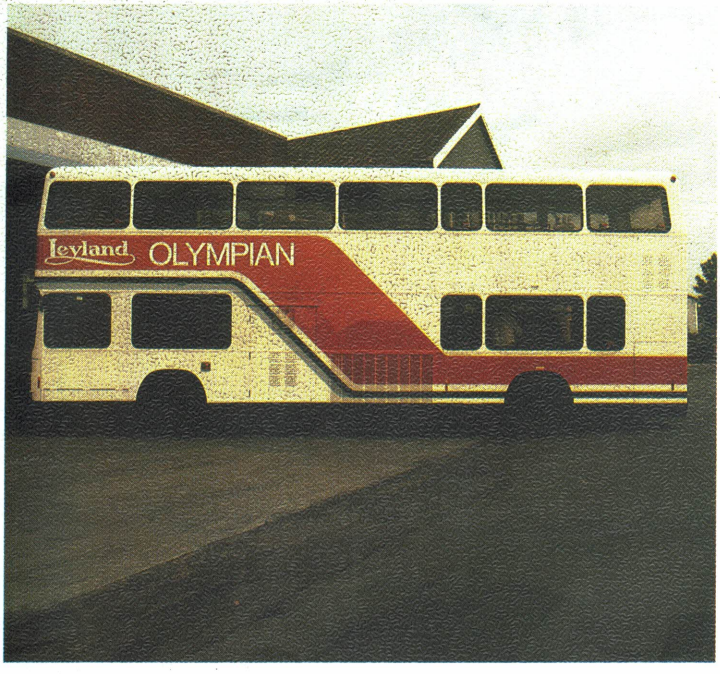

This literature is descriptive of the basic Leyland Bus range. The Company (Leyland Vehicles Ltd) reserve the right to change the materials, specifications, dimensions or designs of the vehicles shown, described or referred to herein at any time and without prior notice. Every reasonable effort is made to ensure that the Company's publications are up to date but nothing shown, described or referred to herein should be regarded as an infallible guide to the materials, specifications, dimensions, design, price or availability of any particular vehicle, nor does this publication constitute an offer for the sale of any particular vehicle. All vehicles and parts are sold subject to the Company's terms and conditions of business. The Company's sales staff will always be pleased to advise customers of the latest information relevant to Leyland buses.

Leyland
OLYMPIAN

Leyland Bus, Export Department, Thurston Road, Leyland, Preston, PR5 1SN, UK.
Telephone from USA 01144 0772 424241, Telex: 67515.

Lit. No. LB1114

www.barp.ca